Central™
Semiconductor Corp.
145 Adams Avenue, Hauppauge, NY 11788 USA
Tel: (631) 435-1110 • Fax: (631) 435-1824

Manufacturers of World Class Discrete Semiconductors

TIP120 TIP121 TIP122 NPN
TIP125 TIP126 TIP127 PNP

SILICON POWER DARLINGTON COMPLEMENTARY TRANSISTORS

JEDEC TO-220 CASE

DESCRIPTION

The CENTRAL SEMICONDUCTOR TIP120, TIP125 series types are Complementary Silicon Power Darlington Transistors designed for low speed switching and amplifier applications.

MAXIMUM RATINGS (T_C=25°C)

	SYMBOL	TIP120 TIP125	TIP121 TIP126	TIP122 TIP127	UNITS
Collector-Base Voltage	V_{CBO}	60	80	100	V
Collector-Emitter Voltage	V_{CEO}	60	80	100	V
Emitter-Base Voltage	V_{EBO}	5.0	5.0	5.0	V
Collector Current	I_C		5.0		A
Collector Current (Peak)	I_{CM}		8.0		A
Base Current	I_B		120		mA
Power Dissipation	P_D		65		W
Operating and Storage Junction Temperature	T_J, T_{stg}		-65 to +150		°C
Thermal Resistance	Θ_{JC}		1.92		°C/W

ELECTRICAL CHARACTERISTICS (T_C=25°C unless otherwise noted)

SYMBOL	TEST CONDITIONS	TIP120 TIP125 MIN	TIP120 TIP125 MAX	TIP121 TIP126 MIN	TIP121 TIP126 MAX	TIP122 TIP127 MIN	TIP122 TIP127 MAX	UNITS
I_{CBO}	V_{CB}=60V		0.2		-		-	mA
I_{CBO}	V_{CB}=80V		-		0.2		-	mA
I_{CBO}	V_{CB}=100V		-		-		0.2	mA
I_{CEO}	V_{CE}=30V		0.5		-		-	mA
I_{CEO}	V_{CE}=40V		-		0.5		-	mA
I_{CEO}	V_{CE}=50V		-		-		0.5	mA
I_{EBO}	V_{BE}=5.0V		2.0		2.0		2.0	mA
BV_{CEO}	I_C=100mA	60		80		100		V
$V_{CE(SAT)}$	I_C=3.0A, I_B=12mA		2.0		2.0		2.0	V
$V_{CE(SAT)}$	I_C=5.0A, I_B=20mA		4.0		4.0		4.0	V
$V_{BE(ON)}$	V_{CE}=3.0V, I_C=3.0A		2.5		2.5		2.5	V
h_{FE}	V_{CE}=3.0V, I_C=0.5A	1000		1000		1000		
h_{FE}	V_{CE}=3.0V, I_C=3.0A	1000		1000		1000		
f_T	V_{CE}=4.0V, I_C=3.0A, f=1.0MHz	4.0		4.0		4.0		MHz

(Continued on reverse side)

ELECTRICAL CHARACTERISTICS (T_C=25°C unless otherwise noted)

		MIN	MAX	UNITS
C_{ob}	V_{CB}=10V, I_E=0, f=0.1MHz TIP120, TIP121, TIP122		200	pF
C_{ob}	V_{CB}=10V, I_E=0, f=0.1MHz TIP125, TIP126, TIP127		300	pF

JEDEC TO-220 CASE - MECHANICAL OUTLINE

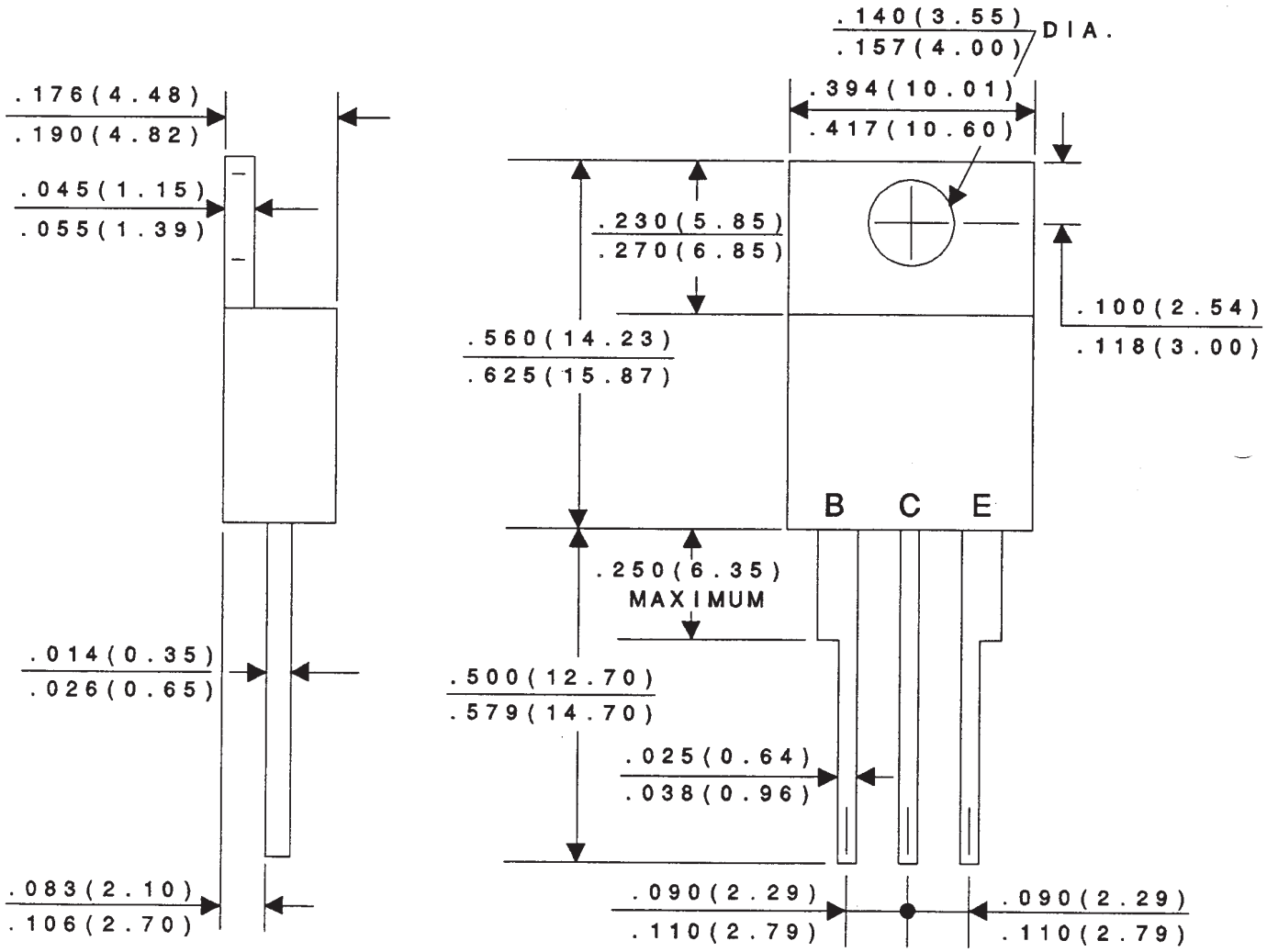

All Dimensions in Inches (mm).

Central™

Semiconductor Corp.

Package Details - TO-220

Mechanical Drawing

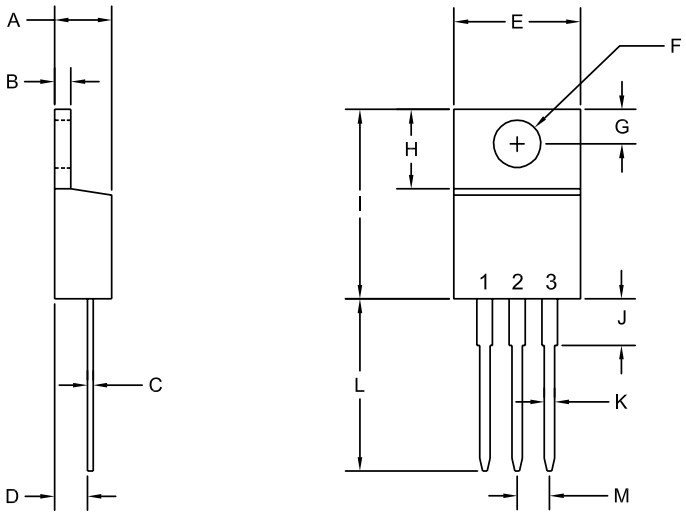

DIMENSIONS				
	INCHES		MILLIMETERS	
SYMBOL	MIN	MAX	MIN	MAX
A	0.170	0.190	4.31	4.82
B	0.045	0.055	1.15	1.39
C	0.013	0.026	0.33	0.65
D	0.083	0.107	2.10	2.72
E	0.394	0.417	10.01	10.60
F (DIA)	0.140	0.157	3.55	4.00
G	0.100	0.118	2.54	3.00
H	0.230	0.270	5.85	6.85
I	0.560	0.625	14.23	15.87
J	-	0.250	-	6.35
K	0.025	0.038	0.64	0.96
L	0.500	0.579	12.70	14.70
M	0.090	0.110	2.29	2.79

TO-220 (REV: R2)

R2

LEAD CODE:

TRIAC
1) MT1
2) MT2
3) GATE

SCR
1) CATHODE
2) ANODE
3) GATE

TRANSISTOR
1) BASE
2) COLLECTOR
3) EMITTER

Note: TAB is Common to Pin 2

Packing Information

Standard: Bulk

Devices are bulk packed in white corrugated box with black conductive coating (surface resistivity of $<10^5$ ohms per square).

Standard Packing Quantity: 500

Sleeve Packing Quantity: 50

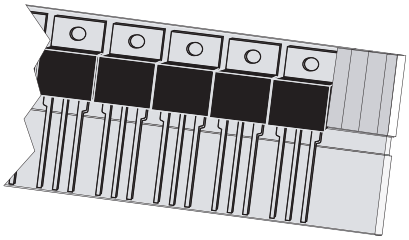

TO-220 Antistatic Sleeve

Material Composition Specification

TO-220 Case

Device average mass . . . . . **1.89 g**

Fluctuation margin . . . . . **+/-10%**

Component	Material	Material (%wt)	Material (mg)	Substance	CAS No.	Substance (%wt)	Substance (mg)	Substance (ppm)
active device	doped Si	0.3%	5.67	Si	7440-21-3	0.3%	5.67	3,006
bond wire	aluminum	0.14%	2.55	Al	7429-90-5	0.14%	2.55	1,352
leadframe	Cu alloy	66.89%	1261.86	Cu	7440-50-8	66.79%	1,260	667,944
				Fe	7439-89-6	0.003%	0.06	32
				P	7723-14-0	0.1%	1.8	954
die attach	high temperature solder	0.33%	6.21	Pb	7439-92-1	0.3%	5.74	3,043
				Sn	7440-31-5	0.02%	0.31	164
				Ag	7440-22-4	0.01%	0.16	82
encapsulation*	EMC	31.81%	600	silica	7631-86-9	23.22%	438	232,190
				epoxy resin	Proprietary	7.32%	138	73,156
				Sb_2O_3	1309-64-4	0.64%	12	6,361
				TBBA	79-94-7	0.64%	12	6,361
	EMC GREEN	31.81%	600	silica	7631-86-9	23.86%	450	238,552
				epoxy resin	Proprietary	4.93%	93	49,301
				epoxy polymer	Proprietary	2.39%	45	23,855
				Sb_2O_3	1309-64-4	0.54%	10.2	5,406
				carbon black	1333-86-4	0.1%	1.8	954
plating**	tin/lead process	0.54%	10.1	Sn	7440-31-5	0.43%	8.08	4,283
				Pb	7439-92-1	0.11%	2.02	1,071
	matte tin	0.54%	10.1	Sn	7440-31-5	0.54%	10.1	5,354

*EMC GREEN molding compound is Halogen-Free.
**For Lead Free plating, add suffix “PB FREE” to part number.
For Tin/Lead plating, add suffix “TIN/LEAD” to part number.
No suffix designation allows for the supply of either lead-free or tin/lead plated product depending on availability.

Disclaimer
The information provided in this Material Composition data sheet is, to the best of our knowledge, correct. However, there is no guarantee to completeness or accuracy, as some information is derived from data sources outside the company.

Material Composition Specification

TO-220 Case

Device average mass . . . . . **1.89 g**

Fluctuation margin . . . . . **+/-10%**

Component	Material	Material (%wt)	Material (mg)	Substance	CAS No.	Substance (%wt)	Substance (mg)	Substance (ppm)
active device	doped Si	0.3%	5.67	Si	7440-21-3	0.3%	5.67	3,006
bond wire	aluminum	0.14%	2.55	Al	7429-90-5	0.14%	2.55	1,352
leadframe	Cu alloy	66.89%	1261.86	Cu	7440-50-8	66.79%	1,260	667,944
				Fe	7439-89-6	0.003%	0.06	32
				P	7723-14-0	0.1%	1.8	954
die attach	high temperature solder	0.33%	6.21	Pb	7439-92-1	0.3%	5.74	3,043
				Sn	7440-31-5	0.02%	0.31	164
				Ag	7440-22-4	0.01%	0.16	82
encapsulation*	EMC	31.81%	600	silica	7631-86-9	23.22%	438	232,190
				epoxy resin	Proprietary	7.32%	138	73,156
				Sb_2O_3	1309-64-4	0.64%	12	6,361
				TBBA	79-94-7	0.64%	12	6,361
	EMC GREEN	31.81%	600	silica	7631-86-9	23.86%	450	238,552
				epoxy resin	Proprietary	4.93%	93	49,301
				epoxy polymer	Proprietary	2.39%	45	23,855
				Sb_2O_3	1309-64-4	0.54%	10.2	5,406
				carbon black	1333-86-4	0.1%	1.8	954
plating**	tin/lead process	0.54%	10.1	Sn	7440-31-5	0.43%	8.08	4,283
				Pb	7439-92-1	0.11%	2.02	1,071
	matte tin	0.54%	10.1	Sn	7440-31-5	0.54%	10.1	5,354

*EMC GREEN molding compound is Halogen-Free.
**For Lead Free plating, add suffix “PB FREE” to part number.
For Tin/Lead plating, add suffix “TIN/LEAD” to part number.
No suffix designation allows for the supply of either lead-free or tin/lead plated product depending on availability.

Disclaimer
The information provided in this Material Composition data sheet is, to the best of our knowledge, correct. However, there is no guarantee to completeness or accuracy, as some information is derived from data sources outside the company.

OUTSTANDING SUPPORT AND SUPERIOR SERVICES

PRODUCT SUPPORT

Central's operations team provides the highest level of support to insure product is delivered on-time.

- Supply management (Customer portals)
- Inventory bonding
- Consolidated shipping options
- Custom bar coding for shipments
- Custom product packing

DESIGNER SUPPORT/SERVICES

Central's applications engineering team is ready to discuss your design challenges. Just ask.

- Free quick ship samples (2nd day air)
- Online technical data and parametric search
- SPICE models
- Custom electrical curves
- Environmental regulation compliance
- Customer specific screening
- Up-screening capabilities
- Special wafer diffusions
- PbSn plating options
- Package details
- Application notes
- Application and design sample kits
- Custom product and package development

REQUESTING PRODUCT PLATING

1. If requesting Tin/Lead plated devices, add the suffix " TIN/LEAD" to the part number when ordering (example: 2N2222A TIN/LEAD).
2. If requesting Lead (Pb) Free plated devices, add the suffix " PBFREE" to the part number when ordering (example: 2N2222A PBFREE).

CONTACT US

Corporate Headquarters & Customer Support Team

Central Semiconductor Corp.
145 Adams Avenue
Hauppauge, NY 11788 USA
Main Tel: (631) 435-1110
Main Fax: (631) 435-1824
Support Team Fax: (631) 435-3388
www.centralsemi.com

Worldwide Field Representatives:
www.centralsemi.com/wwreps

Worldwide Distributors:
www.centralsemi.com/wwdistributors

For the latest version of Central Semiconductor's **LIMITATIONS AND DAMAGES DISCLAIMER**, which is part of Central's Standard Terms and Conditions of sale, visit: www.centralsemi.com/terms

http://www.centralsemi.com

Product End of Life Notification

PDN ID:	PDN01043
Notification Date:	8/15/16
Last Buy Date:	2/15/17
Last Shipment Date	8/15/17

Summary:The TIP120 series of NPN and PNP Darlington power transistors, with the exception of TIP122 and TIP127, is discontinued and now classified as End of Life (EOL).

Although Central Semiconductor Corp. makes every effort to continue to produce devices that have been proclaimed EOL (End of Life) by various manufacturers, it is an accepted industry practice to discontinue certain devices when customer demand falls below a minimum level of sustainability. Accordingly, the following product(s) have been transitioned to End of Life status as part of Central's Product Management Process. Any replacement product will be noted below. The effective date for placing the last purchase order will be six(6) months from the date of this notice and twelve(12) months from the notice date for final shipments; this may be extended if inventory is available.

Central Part Number	Replacement
TIP120	TIP122
TIP121	TIP122
TIP125	TIP127
TIP125 SL	TIP127 SL
TIP126	TIP127

Central would be happy to assist you by providing additional information or technical data to help locate an alternate source if we have no replacement available. Please email your requests to engineering@centralsemi.com.

DISCLAIMER: This End of Life (EOL) notification is in accordance with JEDEC standard JESD48 - Product Discontinuance. Central Semiconductor Corp. will make every effort to offer life-time buy (LTB) opportunities and/or offer replacement devices to existing customers for discontinued devices, however, one or both may not be possible for all devices. Please contact your local Central Semiconductor sales representative for LTB opportunities/additional information.

https://www.centralsemi.com

Product End of Life Notification

PDN ID:	PDN01250
Notification Date:	2/10/23
Last Buy Date:	Stock Only
Last Shipment Date	Stock Only

Please be advised that Central Semiconductor must immediately discontinue the product(s) listed in the attached PDN notice. Orders can only be accepted for products with available inventory on hand.

You may have purchased one or more of the products listed. Please do not hesitate to contact your local Central Semiconductor sales representative with any questions or needs you may have. Central regrets any inconvenience this may cause.

Sincerely,

Central Semiconductor, LLC

DISCLAIMER: This End of Life (EOL) notification is in accordance with JEDEC standard JESD48 - Product Discontinuance. Central Semiconductor will make every effort to offer life-time buy (LTB) opportunities and/or offer replacement devices to existing customers for discontinued devices, however, one or both may not be possible for all devices. Please contact your local Central Semiconductor sales representative for LTB opportunities/additional information.

https://www.centralsemi.com

Product End of Life Notification

PDN ID:	PDN01250
Notification Date:	2/10/23
Last Buy Date:	Stock Only
Last Shipment Date	Stock Only

Summary:The following power transistors are discontinued and now classified as of End of Life (EOL). NOTE: If inventory has been depleted, some devices may be available on special order; please contact your Central salesperson, manufacturer's rep, franchised distributor, or inquiry@centralsemi.com.

Although Central Semiconductor makes every effort to continue to produce devices that have been proclaimed EOL (End of Life) by other manufacturers, it is an accepted industry practice to discontinue certain devices when customer demand falls below a minimum level of sustainability. Accordingly, the following product(s) have been transitioned to End of Life status as part of Central's ongoing Product Portfolio Management. Any replacement products are noted below. The effective date for placing last purchase orders will be six (6) months from the date of this notice and twelve (12) months from the notice date for final shipments, and minimum order quantities may apply. The last purchase and shipment dates may be extended if inventory is available.

*** All Plating types (PBFREE,TIN/LEAD) for each item listed are included in this notice.**

Central Part Number	Suggested Replacement
BDW51	N/A
BDW51A	N/A
BDW51B	N/A
BDW51C	N/A
BDW52	N/A
BDW52A	N/A
BDW52B	N/A
BDW52C	N/A
BDW94B	N/A
BDX20	N/A
BDX54	N/A
BDX54B	N/A
BDX54C	N/A
BDX54E	N/A
BDX85	N/A
BDX85A	N/A
BDX85B	N/A
BDX85C	N/A
BDX87	N/A
BDX87A	N/A
BDX87B	N/A
BDX87C	N/A
BDY90	N/A
BD135	N/A
BD135 SL	N/A
BD135-10 SL	N/A
BD135-16	N/A
BD135-16 SL	N/A
BD136	N/A
BD136-10	N/A
BD136-10 SL	N/A
BD136-16	N/A
BD136-16 SL	N/A
BD137	N/A

*** CONTINUED ***

DISCLAIMER: This End of Life (EOL) notification is in accordance with JEDEC standard JESD48 - Product Discontinuance. Central Semiconductor will make every effort to offer life-time buy (LTB) opportunities and/or offer replacement devices to existing customers for discontinued devices, however, one or both may not be possible for all devices. Please contact your local Central Semiconductor sales representative for LTB opportunities/additional information.

*** CONTINUED FROM PRIOR PAGE ***

*** All Plating types (PBFREE,TIN/LEAD) for each item listed are included in this notice.**

Central Part Number	Suggested Replacement
BD137-10	N/A
BD137-10 SL	N/A
BD137-16	N/A
BD138	N/A
BD138-10	N/A
BD138-10 SL	N/A
BD138-16	N/A
BD138-16 SL	N/A
BD139	N/A
BD139-10	N/A
BD139-10 SL	N/A
BD139-16	N/A
BD139-16 SL	N/A
BD140	N/A
BD140-10	N/A
BD140-10 SL	N/A
BD140-16	N/A
BD140-16 SL	N/A
BD157	N/A
BD158	N/A
BD159	N/A
BD175	N/A
BD176	N/A
BD177	N/A
BD178	N/A
BD179	N/A
BD180	N/A
BD201	N/A
BD204	N/A
BD233	N/A
BD234	N/A
BD235	N/A
BD236	N/A
BD237	N/A
BD238	N/A
BD238 SL	N/A
BD433	N/A
BD434	N/A
BD437	N/A
BD438	N/A
BD439	N/A
BD440	N/A
BD441	N/A

*** CONTINUED ***

DISCLAIMER: This End of Life (EOL) notification is in accordance with JEDEC standard JESD48 - Product Discontinuance. Central Semiconductor will make every effort to offer life-time buy (LTB) opportunities and/or offer replacement devices to existing customers for discontinued devices, however, one or both may not be possible for all devices. Please contact your local Central Semiconductor sales representative for LTB opportunities/additional information.

*** CONTINUED FROM PRIOR PAGE ***

*** All Plating types (PBFREE,TIN/LEAD) for each item listed are included in this notice.**

Central Part Number	Suggested Replacement
BD442	N/A
BD537	N/A
BD538	N/A
BD675	N/A
BD675A	N/A
BD676	N/A
BD676A	N/A
BD676A SL	N/A
BD677	N/A
BD677A	N/A
BD678	N/A
BD678A	N/A
BD679	N/A
BD679A	N/A
BD679A SL	N/A
BD680	N/A
BD680A	N/A
BD680A SL	N/A
BD681	N/A
BD681 SL	N/A
BD682	N/A
BD682 SL	N/A
BD683	N/A
BD683 SL	N/A
BD908	N/A
BF457	N/A
BF458	N/A
BF459	N/A
BF459 SL	N/A
BF469	N/A
BF471	N/A
BF472	N/A
BUW34	N/A
BUW35	N/A
BUW36	N/A
BUW44	N/A
BUW45	N/A
BUW46	N/A
BUX43	N/A
BUX44	N/A
BUX47	N/A
BUX48	N/A
BUX80	N/A

*** CONTINUED ***

DISCLAIMER: This End of Life (EOL) notification is in accordance with JEDEC standard JESD48 - Product Discontinuance. Central Semiconductor will make every effort to offer life-time buy (LTB) opportunities and/or offer replacement devices to existing customers for discontinued devices, however, one or both may not be possible for all devices. Please contact your local Central Semiconductor sales representative for LTB opportunities/additional information.

https://www.centralsemi.com

Product End of Life Notification

PDN ID:	PDN01250
Notification Date:	2/10/23
Last Buy Date:	Stock Only
Last Shipment Date	Stock Only

*** CONTINUED FROM PRIOR PAGE ***

*** All Plating types (PBFREE,TIN/LEAD) for each item listed are included in this notice.**

Central Part Number	Suggested Replacement
BUY69A	N/A
BUY69B	N/A
BUY69C	N/A
BU408	N/A
BU409	N/A
CEN1025	N/A
CEN1037	N/A
CEN1063	N/A
CEN1092	N/A
CEN1102	N/A
CEN1111	N/A
CEN1177	N/A
CEN1247	N/A
CEN1306	N/A
CEN1323	N/A
CEN1328	N/A
CEN1364 SL	N/A
CEN1378 SL	N/A
CEN1391	N/A
CEN1396	N/A
CEN1406	N/A
CEN1416	N/A
CEN1439	N/A
CEN1450	N/A
CEN496	N/A
CEN537	N/A
CEN591	N/A
CEN596	N/A
CEN644	N/A
CEN671	N/A
CEN698-1	N/A
CEN698-2	N/A
CEN774	N/A
CEN821	N/A
CEN844	N/A
CEN925	N/A
CEN951	N/A
CEN961	N/A
CEN972	N/A
CEN992	N/A
CM3441	N/A
CP166-BUP54-WN	N/A
CZT122 BK	N/A

*** CONTINUED ***

DISCLAIMER: This End of Life (EOL) notification is in accordance with JEDEC standard JESD48 - Product Discontinuance. Central Semiconductor will make every effort to offer life-time buy (LTB) opportunities and/or offer replacement devices to existing customers for discontinued devices, however, one or both may not be possible for all devices. Please contact your local Central Semiconductor sales representative for LTB opportunities/additional information.

*** CONTINUED FROM PRIOR PAGE ***

*** All Plating types (PBFREE,TIN/LEAD) for each item listed are included in this notice.**

Central Part Number	Suggested Replacement
CZT122 TR	N/A
CZT31C BK	N/A
CZT31C TR	N/A
D44C12	N/A
D44E1	N/A
D44E3	N/A
D45E3	N/A
D45H8	N/A
MJE13003	N/A
MJE13003 SL	N/A
MJE13005	N/A
MJE13005 SL	N/A
MJE13006	N/A
MJE13008	N/A
MJE13009	N/A
MJE15030	N/A
MJE15031	N/A
MJE170	N/A
MJE171	N/A
MJE172	N/A
MJE180	N/A
MJE181	N/A
MJE182	N/A
MJE200	N/A
MJE210	N/A
MJE220	N/A
MJE221	N/A
MJE222	N/A
MJE223	N/A
MJE224	N/A
MJE225	N/A
MJE230	N/A
MJE231	N/A
MJE232	N/A
MJE233	N/A
MJE234	N/A
MJE235	N/A
MJE2360T	N/A
MJE240	N/A
MJE241	N/A
MJE242	N/A
MJE243	N/A
MJE244	N/A

*** CONTINUED ***

DISCLAIMER: This End of Life (EOL) notification is in accordance with JEDEC standard JESD48 - Product Discontinuance. Central Semiconductor will make every effort to offer life-time buy (LTB) opportunities and/or offer replacement devices to existing customers for discontinued devices, however, one or both may not be possible for all devices. Please contact your local Central Semiconductor sales representative for LTB opportunities/additional information.

https://www.centralsemi.com

Product End of Life Notification

PDN ID:	PDN01250
Notification Date:	2/10/23
Last Buy Date:	Stock Only
Last Shipment Date	Stock Only

*** CONTINUED FROM PRIOR PAGE ***

*** All Plating types (PBFREE,TIN/LEAD) for each item listed are included in this notice.**

Central Part Number	Suggested Replacement
MJE250	N/A
MJE251	N/A
MJE252	N/A
MJE253	N/A
MJE254	N/A
MJE2801T	N/A
MJE2901T	N/A
MJE2955T	N/A
MJE340	N/A
MJE341	N/A
MJE344	N/A
MJE344 SL	N/A
MJE3440	N/A
MJE350	N/A
MJE370	N/A
MJE371	N/A
MJE520	N/A
MJE521	N/A
MJE700	N/A
MJE701	N/A
MJE702	N/A
MJE703	N/A
MJE710	N/A
MJE711	N/A
MJE712	N/A
MJE720	N/A
MJE721	N/A
MJE722	N/A
MJE800	N/A
MJE800T	N/A
MJE801	N/A
MJE801T	N/A
MJE802	N/A
MJE802T	N/A
MJE803	N/A
MJE803T	N/A
MJ1000	N/A
MJ1001	N/A
MJ10012	N/A
MJ11011	N/A
MJ11012	N/A
MJ11013	N/A
MJ11014	N/A

*** CONTINUED ***

DISCLAIMER: This End of Life (EOL) notification is in accordance with JEDEC standard JESD48 - Product Discontinuance. Central Semiconductor will make every effort to offer life-time buy (LTB) opportunities and/or offer replacement devices to existing customers for discontinued devices, however, one or both may not be possible for all devices. Please contact your local Central Semiconductor sales representative for LTB opportunities/additional information.

https://www.centralsemi.com

Product End of Life Notification

PDN ID:	PDN01250
Notification Date:	2/10/23
Last Buy Date:	Stock Only
Last Shipment Date	Stock Only

*** CONTINUED FROM PRIOR PAGE ***

*** All Plating types (PBFREE,TIN/LEAD) for each item listed are included in this notice.**

Central Part Number	Suggested Replacement
MJ11015	N/A
MJ11016	N/A
MJ2501	N/A
MJ2955	N/A
MJ3000	N/A
MJ3001	N/A
MJ4033	N/A
MJ4035	N/A
MJ410	N/A
MJ802	N/A
MJ901	N/A
PMD10K100	N/A
PMD10K40	N/A
PMD10K60	N/A
PMD10K80	N/A
PMD12K100	N/A
PMD12K40	N/A
PMD12K60	N/A
PMD12K80	N/A
PMD13K100	N/A
PMD16K100	N/A
PMD16K60	N/A
PMD16K80	N/A
PMD1601K	N/A
PMD1602K	N/A
PMD1603K	N/A
PMD17K100	N/A
PMD17K60	N/A
PMD17K80	N/A
PMD1701K	N/A
PMD1702K	N/A
PMD1703K	N/A
PMD18K100	N/A
PMD18K60	N/A
PMD18K80	N/A
PMD19K100	N/A
PMD19K60	N/A
PMD19K80	N/A
SE9303	N/A
SE9304	N/A
SE9305	N/A
TIP102	N/A
TIP107	N/A

*** CONTINUED ***

DISCLAIMER: This End of Life (EOL) notification is in accordance with JEDEC standard JESD48 - Product Discontinuance. Central Semiconductor will make every effort to offer life-time buy (LTB) opportunities and/or offer replacement devices to existing customers for discontinued devices, however, one or both may not be possible for all devices. Please contact your local Central Semiconductor sales representative for LTB opportunities/additional information.

*** CONTINUED FROM PRIOR PAGE ***

*** All Plating types (PBFREE,TIN/LEAD) for each item listed are included in this notice.**

Central Part Number	Suggested Replacement
TIP107 SL	N/A
TIP117	N/A
TIP117 SL	N/A
TIP122	N/A
TIP122 SL	N/A
TIP127	N/A
TIP127 SL	N/A
TIP132	N/A
TIP137	N/A
TIP140T	N/A
TIP141T	N/A
TIP142T	N/A
TIP145T	N/A
TIP146T	N/A
TIP147T	N/A
TIP29	N/A
TIP29A	N/A
TIP29A SL	N/A
TIP29B	N/A
TIP29C	N/A
TIP31	N/A
TIP31 SL	N/A
TIP31A	N/A
TIP31B	N/A
TIP31C SL	N/A
TIP32	N/A
TIP32A	N/A
TIP32A SL	N/A
TIP32B	N/A
TIP32C	N/A
TIP41	N/A
TIP41A	N/A
TIP41B	N/A
TIP41C	N/A
TIP41C SL	N/A
TIP42	N/A
TIP42A	N/A
TIP42B	N/A
TIP42C	N/A
TIP42C SL	N/A
TIP42D	N/A
2N3054	N/A
2N3055	N/A

*** CONTINUED ***

DISCLAIMER: This End of Life (EOL) notification is in accordance with JEDEC standard JESD48 - Product Discontinuance. Central Semiconductor will make every effort to offer life-time buy (LTB) opportunities and/or offer replacement devices to existing customers for discontinued devices, however, one or both may not be possible for all devices. Please contact your local Central Semiconductor sales representative for LTB opportunities/additional information.

https://www.centralsemi.com

Product End of Life Notification

PDN ID:	PDN01250
Notification Date:	2/10/23
Last Buy Date:	Stock Only
Last Shipment Date	Stock Only

*** CONTINUED FROM PRIOR PAGE ***

*** All Plating types (PBFREE,TIN/LEAD) for each item listed are included in this notice.**

Central Part Number	Suggested Replacement
2N3442	N/A
2N3448	N/A
2N3713	N/A
2N3714	N/A
2N3715	N/A
2N3716	N/A
2N3766	N/A
2N3767	N/A
2N3771	N/A
2N3772	N/A
2N3773	N/A
2N3789	N/A
2N3790	N/A
2N3791	N/A
2N3792	N/A
2N3902	N/A
2N4231	N/A
2N4232	N/A
2N4233	N/A
2N4347	N/A
2N4348	N/A
2N4398	N/A
2N4399	N/A
2N4901	N/A
2N4902	N/A
2N4903	N/A
2N4904	N/A
2N4905	N/A
2N4906	N/A
2N4910	N/A
2N4911	N/A
2N4912	N/A
2N4913	N/A
2N4914	N/A
2N4915	N/A
2N4918	N/A
2N4919	N/A
2N4920	N/A
2N4921	N/A
2N4922	N/A
2N4923	N/A
2N4923 SL	N/A
2N5067	N/A

*** CONTINUED ***

DISCLAIMER: This End of Life (EOL) notification is in accordance with JEDEC standard JESD48 - Product Discontinuance. Central Semiconductor will make every effort to offer life-time buy (LTB) opportunities and/or offer replacement devices to existing customers for discontinued devices, however, one or both may not be possible for all devices. Please contact your local Central Semiconductor sales representative for LTB opportunities/additional information.

*** CONTINUED FROM PRIOR PAGE ***

*** All Plating types (PBFREE,TIN/LEAD) for each item listed are included in this notice.**

Central Part Number	Suggested Replacement
2N5068	N/A
2N5069	N/A
2N5192	N/A
2N5192 SL	N/A
2N5195	N/A
2N5195 SL	N/A
2N5240	N/A
2N5294	N/A
2N5296	N/A
2N5297	N/A
2N5297 SL	N/A
2N5298	N/A
2N5301	N/A
2N5302	N/A
2N5303	N/A
2N5490	N/A
2N5492	N/A
2N5494	N/A
2N5496	N/A
2N5629	N/A
2N5632	N/A
2N5655	N/A
2N5656	N/A
2N5657	N/A
2N5745	N/A
2N5760	N/A
2N5838	N/A
2N5873	N/A
2N5875	N/A
2N5876	N/A
2N5877	N/A
2N5878	N/A
2N5879	N/A
2N5880	N/A
2N5881	N/A
2N5882	N/A
2N5883	N/A
2N5884	N/A
2N5885	N/A
2N5886	N/A
2N6029	N/A
2N6031	N/A
2N6034	N/A

*** CONTINUED ***

DISCLAIMER: This End of Life (EOL) notification is in accordance with JEDEC standard JESD48 - Product Discontinuance. Central Semiconductor will make every effort to offer life-time buy (LTB) opportunities and/or offer replacement devices to existing customers for discontinued devices, however, one or both may not be possible for all devices. Please contact your local Central Semiconductor sales representative for LTB opportunities/additional information.

*** CONTINUED FROM PRIOR PAGE ***

*** All Plating types (PBFREE,TIN/LEAD) for each item listed are included in this notice.**

Central Part Number	Suggested Replacement
2N6035	N/A
2N6036	N/A
2N6037	N/A
2N6038	N/A
2N6039 SL	N/A
2N6040	N/A
2N6042	N/A
2N6043	N/A
2N6044	N/A
2N6045	N/A
2N6050	N/A
2N6051	N/A
2N6052	N/A
2N6055	N/A
2N6056	N/A
2N6057	N/A
2N6058	N/A
2N6059	N/A
2N6099	N/A
2N6109	N/A
2N6111	N/A
2N6121	N/A
2N6122	N/A
2N6123	N/A
2N6124	N/A
2N6125	N/A
2N6126	N/A
2N6129	N/A
2N6130	N/A
2N6131	N/A
2N6132	N/A
2N6133	N/A
2N6134	N/A
2N6226	N/A
2N6229	N/A
2N6230	N/A
2N6246	N/A
2N6247	N/A
2N6248	N/A
2N6249	N/A
2N6250	N/A
2N6251	N/A
2N6253	N/A

*** CONTINUED ***

DISCLAIMER: This End of Life (EOL) notification is in accordance with JEDEC standard JESD48 - Product Discontinuance. Central Semiconductor will make every effort to offer life-time buy (LTB) opportunities and/or offer replacement devices to existing customers for discontinued devices, however, one or both may not be possible for all devices. Please contact your local Central Semiconductor sales representative for LTB opportunities/additional information.

https://www.centralsemi.com

Product End of Life Notification

PDN ID:	PDN01250
Notification Date:	2/10/23
Last Buy Date:	Stock Only
Last Shipment Date	Stock Only

*** CONTINUED FROM PRIOR PAGE ***

*** All Plating types (PBFREE,TIN/LEAD) for each item listed are included in this notice.**

Central Part Number	Suggested Replacement
2N6254	N/A
2N6259	N/A
2N6260	N/A
2N6263	N/A
2N6282	N/A
2N6283	N/A
2N6284	N/A
2N6285	N/A
2N6286	N/A
2N6287	N/A
2N6288	N/A
2N6290	N/A
2N6292	N/A
2N6306	N/A
2N6307	N/A
2N6308	N/A
2N6312	N/A
2N6371	N/A
2N6383	N/A
2N6384	N/A
2N6385	N/A
2N6386	N/A
2N6387	N/A
2N6388	N/A
2N6465	N/A
2N6466	N/A
2N6469	N/A
2N6470	N/A
2N6471	N/A
2N6472	N/A
2N6475	N/A
2N6476	N/A
2N6489	N/A
2N6489 SL	N/A
2N6490	N/A
2N6491	N/A
2N6497	N/A
2N6498	N/A
2N6498 SL	N/A
2N6499	N/A
2N6499 SL	N/A
2N6530	N/A
2N6531	N/A

*** CONTINUED ***

DISCLAIMER: This End of Life (EOL) notification is in accordance with JEDEC standard JESD48 - Product Discontinuance. Central Semiconductor will make every effort to offer life-time buy (LTB) opportunities and/or offer replacement devices to existing customers for discontinued devices, however, one or both may not be possible for all devices. Please contact your local Central Semiconductor sales representative for LTB opportunities/additional information.

https://www.centralsemi.com

Product End of Life Notification

PDN ID:	PDN01250
Notification Date:	2/10/23
Last Buy Date:	Stock Only
Last Shipment Date	Stock Only

*** CONTINUED FROM PRIOR PAGE ***

*** All Plating types (PBFREE,TIN/LEAD) for each item listed are included in this notice.**

Central Part Number	Suggested Replacement
2N6532	N/A
2N6543	N/A
2N6544	N/A
2N6545	N/A
2N6546	N/A
2N6547	N/A
2N6569	N/A
2N6576	N/A
2N6577	N/A
2N6578	N/A
2N6594	N/A
2N6609	N/A
2N6666	N/A
2N6667	N/A
2N6668	N/A
2N6671	N/A
2N6672	N/A
2N6673	N/A
2N6674	N/A
2N6675	N/A
2N6677	N/A
2N6678	N/A
40250	N/A
40312	N/A

Central would be happy to assist you by providing additional information or technical data to help locate an alternate source if we have no replacement available. If you would like assistance, please visit https://my.centralsemi.com/submit-inquiry?type=ER to submit an online inquiry.

DISCLAIMER: This End of Life (EOL) notification is in accordance with JEDEC standard JESD48 - Product Discontinuance. Central Semiconductor will make every effort to offer life-time buy (LTB) opportunities and/or offer replacement devices to existing customers for discontinued devices, however, one or both may not be possible for all devices. Please contact your local Central Semiconductor sales representative for LTB opportunities/additional information.