RUGGEDIZED

CMPTA42E-RZ NPN
CMPTA92E-RZ PNP

ENHANCED SPECIFICATION
SURFACE MOUNT
COMPLEMENTARY
SILICON TRANSISTORS
RUGGEDIZED PACKAGING

SOT-23 CASE

DESCRIPTION:
The CENTRAL SEMICONDUCTOR CMPTA42E-RZ and CMPTA92E-RZ are Enhanced versions of the CMPTA42 and CMPTA92 complementary surface mount high voltage transistors. It features a robust design manufactured specifically for operation in harsh environments where temperature and moisture may contribute to degraded performance and reliability.

MARKING CODES: CMPTA42E-RZ: C1DE
CMPTA92E-RZ: C2DE

FEATURED ENHANCED SPECIFICATIONS:
- ♦ BV_{CBO} from 300V min to 350V min.
- ♦ BV_{CEO} from 300V min to 350V min.
- ♦ h_{FE} from 25 min to 50 min.

UNIQUE DEVICE CONSTRUCTION FEATURES:
- Alloy 42 or pure copper lead frame
- Eutectic die attach
- Gold wire bond
- Pb/Sn lead plating available

MAXIMUM RATINGS: (T_A=25°C)	**SYMBOL**		**UNITS**
♦ **Collector-Base Voltage**	**V_{CBO}**	**350**	**V**
♦ **Collector-Emitter Voltage**	**V_{CEO}**	**350**	**V**
Emitter-Base Voltage	V_{EBO}	6.0	V
Continuous Collector Current	I_C	500	mA
Power Dissipation	P_D	350	mW
Operating and Storage Junction Temperature	T_J, T_{stg}	-65 to +150	°C
Thermal Resistance	Θ_{JA}	357	°C/W

ELECTRICAL CHARACTERISTICS: (T_A=25°C unless otherwise noted)

			TYP			
SYMBOL	**TEST CONDITIONS**	**MIN**	**CMPTA42E**	**CMPTA92E**	**MAX**	**UNITS**
I_{CBO}	V_{CB}=200V				250	nA
I_{EBO}	V_{EB}=3.0V				100	nA
♦ **BV_{CBO}**	**I_C=100µA**	**350**	**590**	**500**		**V**
♦ **BV_{CEO}**	**I_C=1.0mA**	**350**	**475**	**450**		**V**
BV_{EBO}	I_E=100µA	6.0	8.7	9.6		V
♦ **$V_{CE(SAT)}$**	**I_C=50mA, I_B=5.0mA**		**125**	**150**	**350**	**mV**
$V_{BE(SAT)}$	I_C=20mA, I_B=2.0mA				0.9	V
♦ **h_{FE}**	**V_{CE}=10V, I_C=1.0mA**	**50**	**110**	**105**		
♦ **h_{FE}**	**V_{CE}=10V, I_C=10mA**	**50**	**110**	**105**		
♦ **h_{FE}**	**V_{CE}=10V, I_C=30mA**	**50**	**110**	**105**		
f_T	V_{CE}=20V, I_C=10mA, f=100MHz	50	75	75		MHz
C_{ob}	V_{CB}=20V, I_E=0, f=1.0MHz				6.0	pF

♦ Enhanced specification

R0 (16-April 2026)

CMPTA42E-RZ NPN
CMPTA92E-RZ PNP

ENHANCED SPECIFICATION
SURFACE MOUNT
COMPLEMENTARY
SILICON TRANSISTORS
RUGGEDIZED PACKAGING

SOT-23 CASE - MECHANICAL OUTLINE

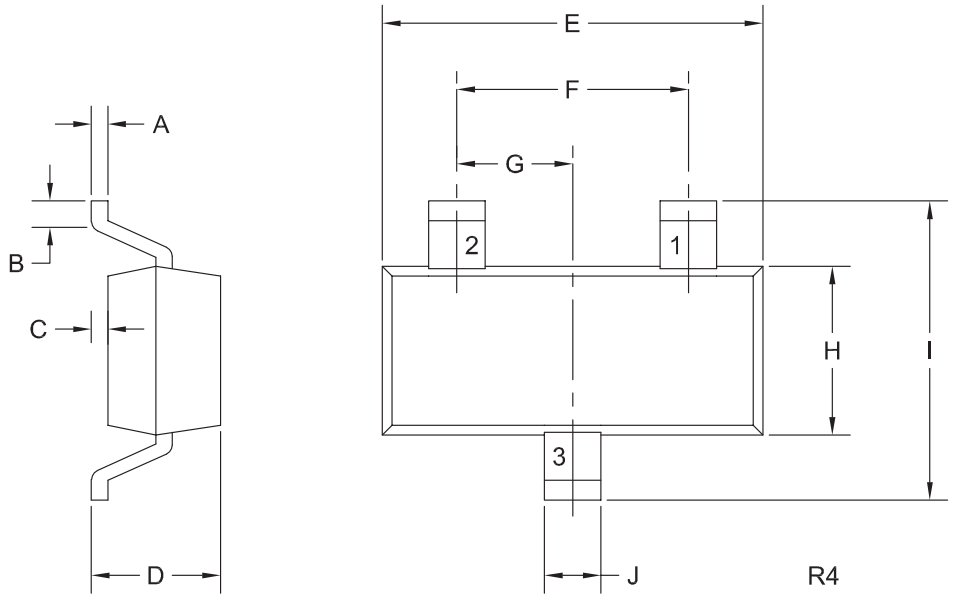

LEAD CODE:
1) Base
2) Emitter
3) Collector

MARKING CODES:
CMPTA42E-RZ: C1DE
CMPTA92E-RZ: C2DE

DIMENSIONS				
	INCHES		MILLIMETERS	
SYMBOL	MIN	MAX	MIN	MAX
A	0.003	0.007	0.08	0.18
B	0.006	-	0.15	-
C	-	0.005	-	0.13
D	0.035	0.044	0.89	1.12
E	0.110	0.120	2.80	3.05
F	0.075		1.90	
G	0.037		0.95	
H	0.047	0.055	1.19	1.40
I	0.083	0.104	2.10	2.64
J	0.014	0.020	0.35	0.50

SOT-23 (REV: R4)

R0 (16-April 2026)

Package Details
SOT-23 Case

Central Semiconductor Corp.

Mechanical Drawing

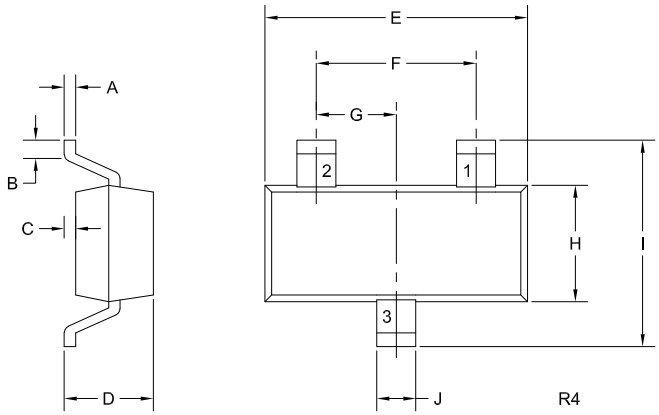

DIMENSIONS				
	INCHES		MILLIMETERS	
SYMBOL	MIN	MAX	MIN	MAX
A	0.003	0.007	0.08	0.18
B	0.006	-	0.15	-
C	-	0.005	-	0.13
D	0.035	0.044	0.89	1.12
E	0.110	0.120	2.80	3.05
F	0.075		1.90	
G	0.037		0.95	
H	0.047	0.055	1.19	1.40
I	0.083	0.104	2.10	2.64
J	0.014	0.020	0.35	0.50

SOT-23 (REV: R4)

Lead Code:
Reference individual device datasheet.

Part Marking: 2-4 Character Alpha/Numeric Code

Mounting Pad Geometry (Dimensions in mm)

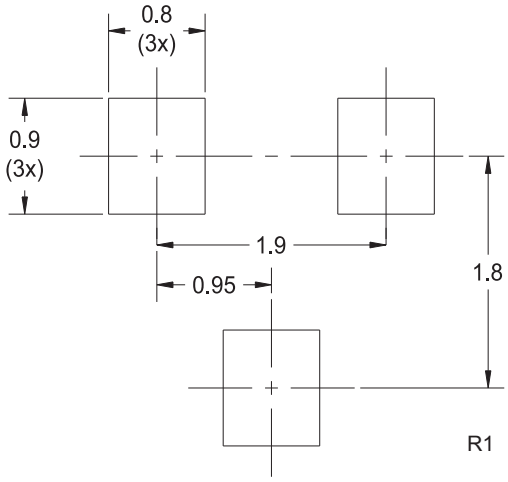

R4 (27-August 2021)

Package Details
SOT-23 Case

Tape Dimensions and Orientation (Dimensions in mm)

Tape Width: 8mm

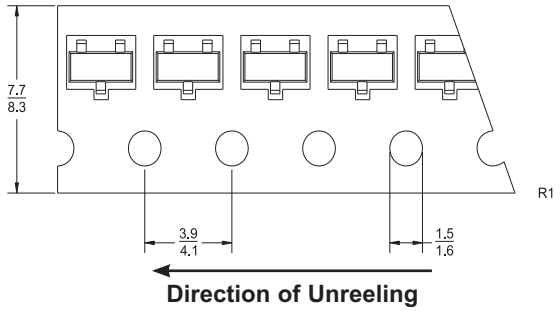

Devices are taped in accordance with Electronic Industries Association Standard EIA-481-D

Packaging Base

7” Reel = 3,000 pcs.
13” Reel = 10,000 pcs.

Reel Labeling Information

Each reel is labeled with the following information:
Central Part Number, Customer Part Number, Purchase Order Number, Quantity, Lot Number, Date Code, Ship Date and Marking Code.

Reel Packing Information

Reel Size	Reels per Box (Maximum)	Parts per Box (Maximum)	Box Dimensions		Shipping Weight (Max.)	
			INCH	CM	LB	KG
7”	9	27,000	9x9x5	23x23x13	3	2
	18	54,000	9x9x9	23x23x23	6	3
	40	120,000	21x9x9	53x23x23	13	6
	108	324,000	27x9x17	69x23x43	34	16
13”	6	60,000	15x4x15	38x10x38	6	3
	14	140,000	15x15x9	38x38x23	15	7
	26	260,000	15x15x18	38x38x46	28	13

Ordering Information

- For devices taped and reeled on 7” reels, add TR suffix to part number.
- For devices taped and reeled on 13” reels, add TR13 suffix to part number.
- All SMDs are available in small quantities for prototype and manual placement applications.

Material Composition Specification

SOT-23 Case

Device average mass . . . . . **8.5 mg**

Fluctuation margin . . . . . **+/-10%**

Component	Material	Material		Substance	CAS No.	Substance		
		(%wt)	(mg)			(%wt)	(mg)	(ppm)
active device	doped Si	2.71%	0.23	Si	7440-21-3	2.71%	0.23	27,059
bond wire	gold or copper	0.25%	0.021	Au	7440-57-5	0.25%	0.021	2,471
				Cu	7440-50-8			
leadframe	alloy 42	25.4%	2.159	Fe	7439-89-6	14.99%	1.274	149,882
				Ni	7440-02-0	10.41%	0.885	104,118
leadframe plating	silver	0.71%	0.06	Ag	7440-22-4	0.71%	0.06	7,059
encapsulation*	EMC	68.94%	5.86	silica	7631-86-9	46.87%	3.984	468,706
				epoxy resin	29690-82-2	13.79%	1.172	137,882
				phenol resin	9003-35-4	6.89%	0.586	68,941
				Sb_2O_3	1309-64-4	0.69%	0.059	6,941
				Br	7726-95-6	0.69%	0.059	6,941
	EMC GREEN	68.94%	5.86	silica (fused)	60676-86-0	53.08%	4.512	530,824
				epoxy resin	29690-82-2	6.89%	0.586	68,941
				phenol resin	9003-35-4	6.68%	0.568	66,824
				carbon black	1333-86-4	0.21%	0.018	2,118
				metal hydroxide	1309-42-8	2.07%	0.176	20,706
plating**	tin/lead process	2.0%	0.17	Sn	7440-31-5	1.59%	0.135	15,882
				Pb	7439-92-1	0.41%	0.035	4,118
	matte tin	2.0%	0.17	Sn	7440-31-5	2.0%	0.17	20,000

*EMC GREEN molding compound is Halogen-Free.
**For Lead Free plating, add suffix “PB FREE” to part number.
For Tin/Lead plating, add suffix “TIN/LEAD” to part number.
No suffix designation allows for the supply of either lead-free or tin/lead plated product depending on availability.

Disclaimer
The information provided in this Material Composition data sheet is, to the best of our knowledge, correct. However, there is no guarantee to completeness or accuracy, as some information is derived from data sources outside the company.